-

B | 17617 | SHEET 1 OF 1

* 18.00/[457,2] RECOMMENDED FOR REMOVAL OF BACK COVER PLATE
10.00/[254,0] REQUIRED FOR REMOVAL OF BACK COVER PLATE

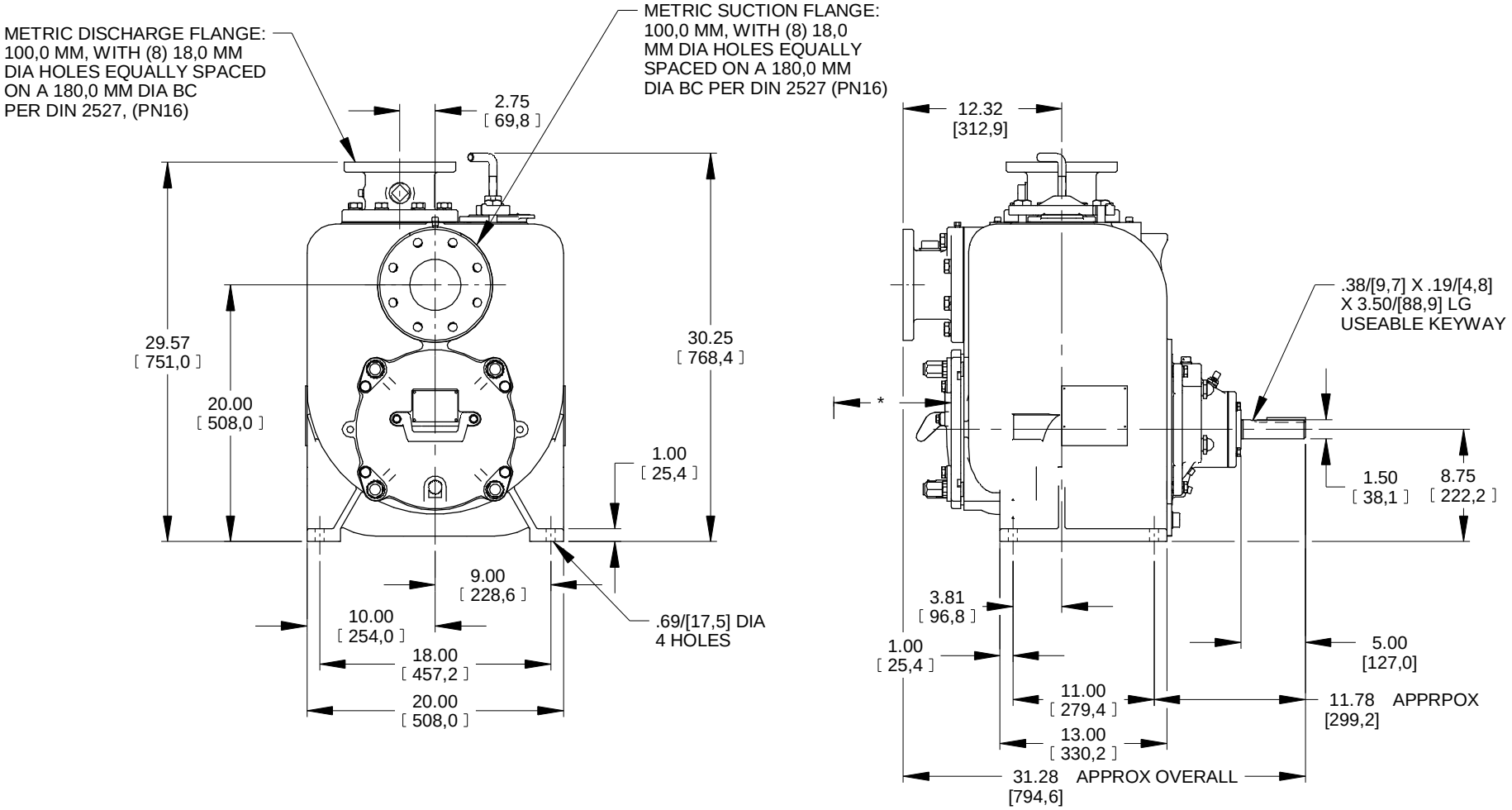

DIMENSIONS:
INCHES
[MILLIMETERS]

11-023

THE GORMAN-RUPP CO. a MANSFIELD, OHIO ST. THOMAS, ONTARIO	DRAWN BY MLB	SCALE 1/8	MODEL U4BS-B /FM
	DATE 4-22-04	REVISED 7-16-12	OUTLINE NUMBER 17617